CAD-Drawing - No hand modification!

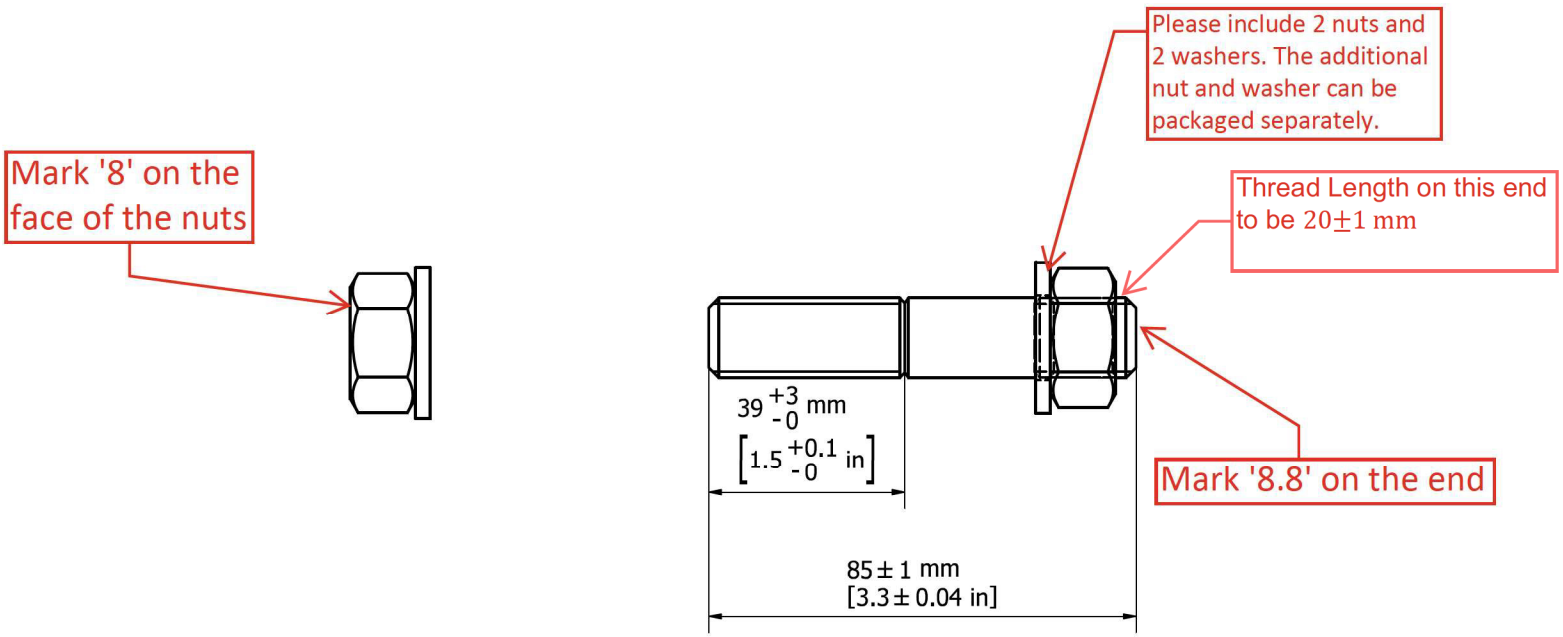

Rev B

USER MANUAL AND CERTIFICATES DELIVERED IN ENGLISH AT DELIVERY UNLESS OTHERWISE SPECIFIED 3D

Gas Type / Temperature	
Gas LHV and Density	
Flow Rate (Max/Min)	
Inlet Pressure (Max / Min)	
Max Allowable Pressure	
Outlet Pressure (Max / Min)	
Maximum Power	
Voltage / NEMA-IP	
Installation	
Ambient temperature	
Normative Base	
PED 2014/168 / ATEX 94/9	
Paint Finish (Pipework)	
Net Weight	0.1 kg

Not toleranced dimensions are +/- 5mm (.2") or +/-5°

Drillings H13 EN 20273
Threads 6H/6g - L - DIN ISO 965-1

	Date	Name
Draw.	3/11/2022	JB
Check.		
Norm		

Index	Description	Date	Name
1	Revert to Flat Washers	5/18/2021	JB

REVISIONS LIST

Scale 1 : 1

Customer Reference

Customer Name

Description
135930
8.8 Zinc Plated Steel Stud - DIN 939 - M16 x 65mm

Customer Validation (Date and Signature)

Format | Index 2 | Page 1 | P.

KARL DUNGS INC. PROPERTY